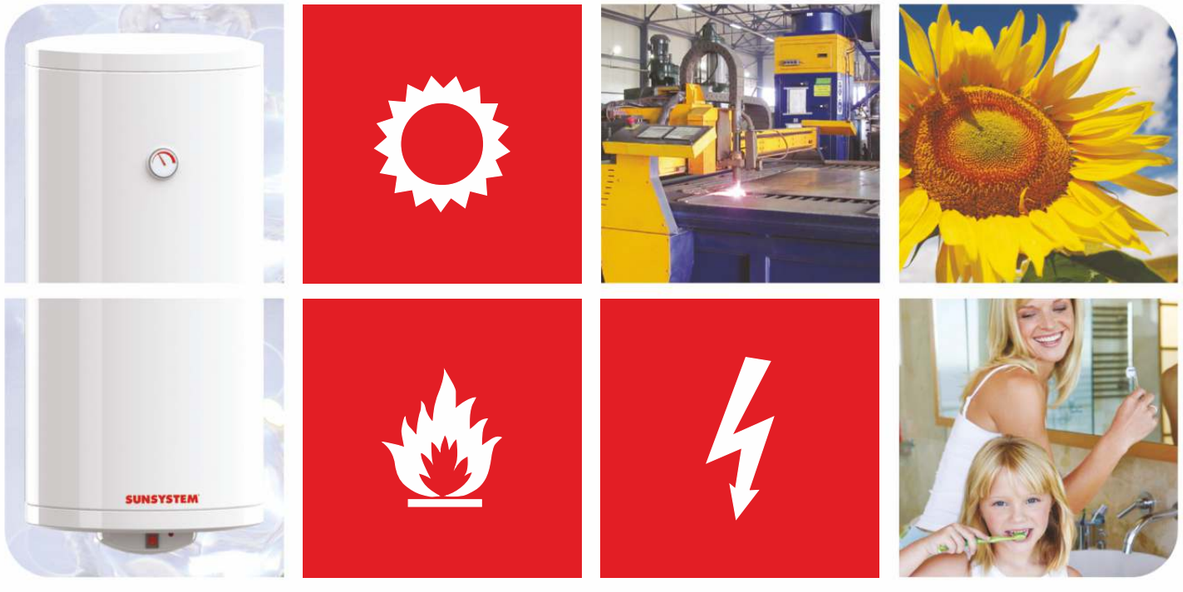

SUNSYSTEM®

www.sunsystem.bg

WALL-HUNG WATER HEATERS

catalogue 2014

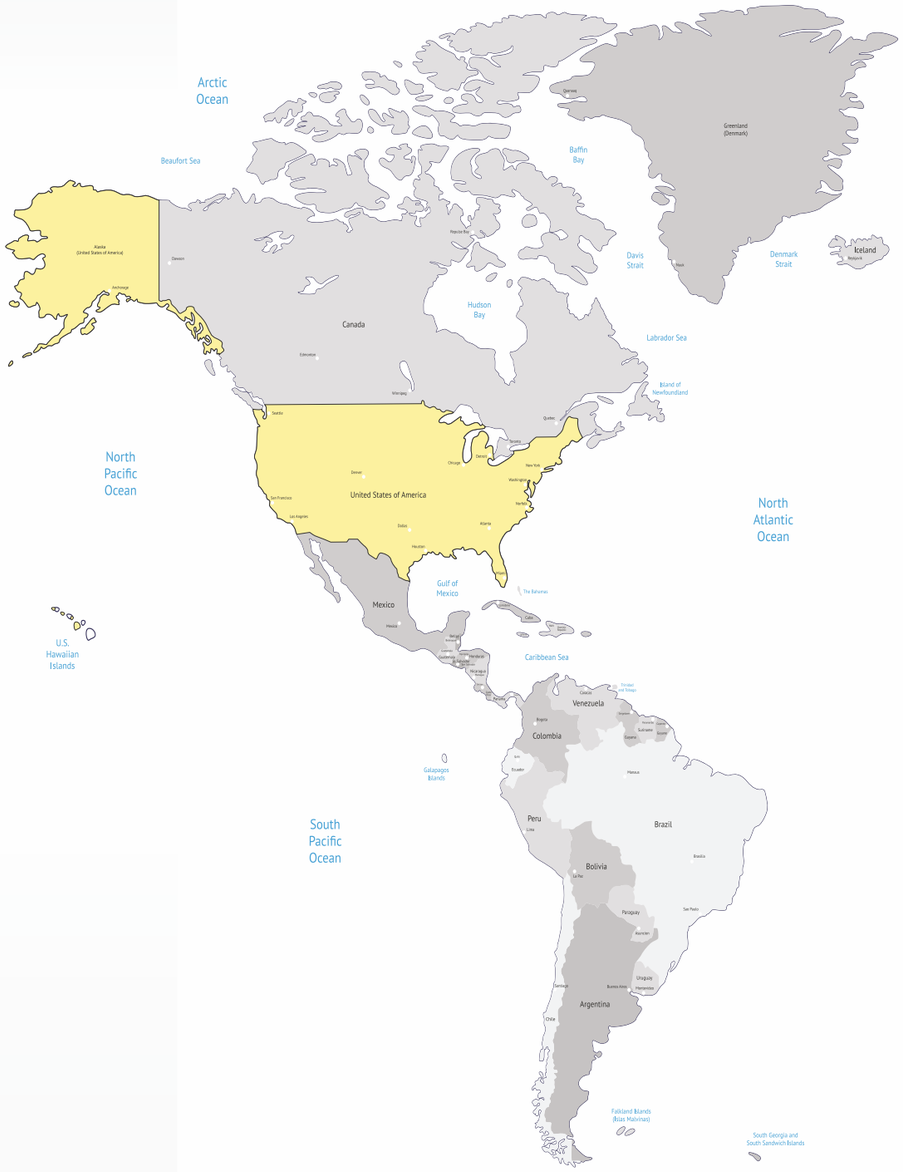

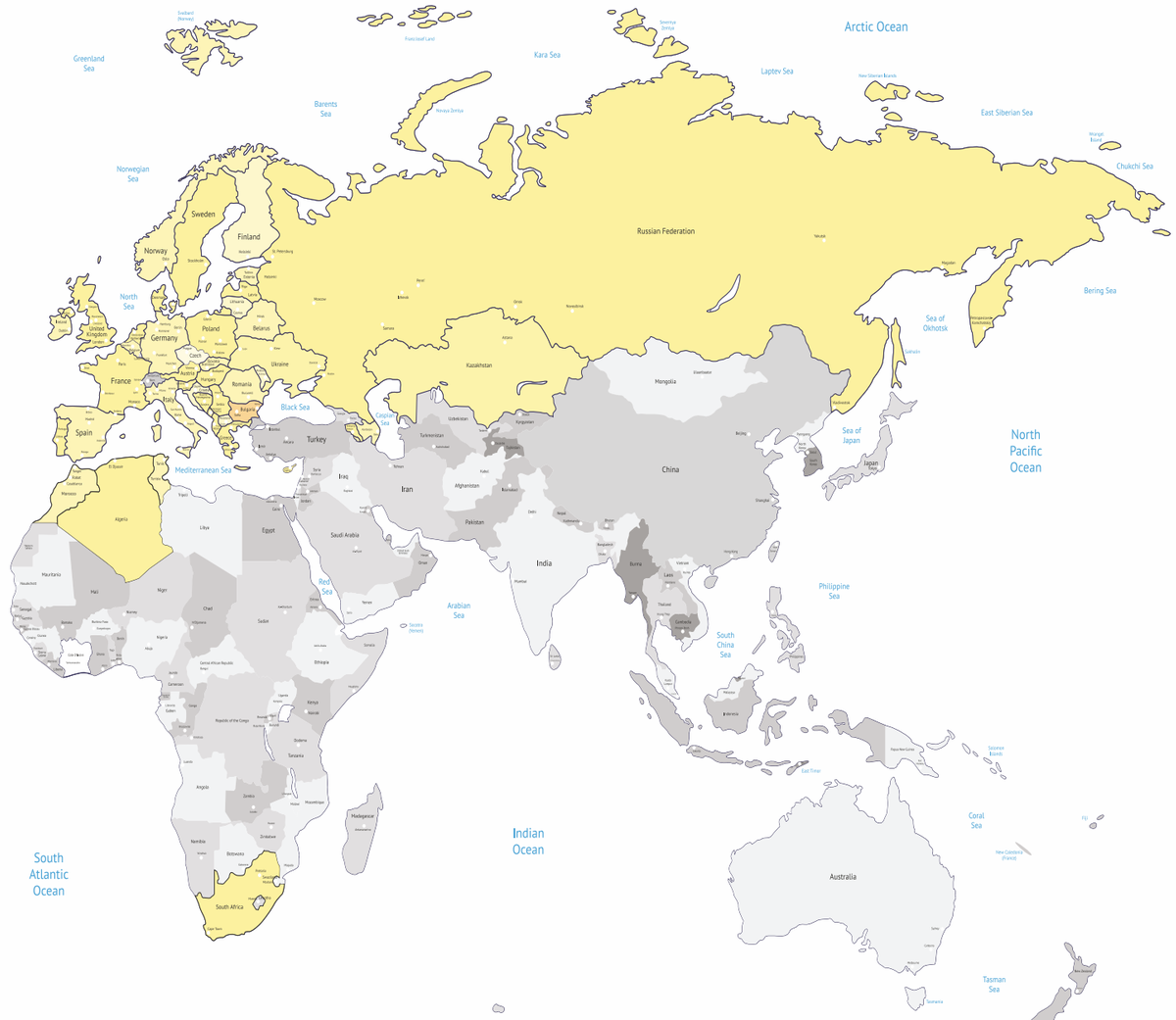

Markets:

Algeria
Albania
Armenia
Austria
Belarus
Belgium
Bulgaria
Bosnia and Herzegovina
Croatia
Kosovo
Czech Republic
Denmark
Estonia
Finland
France
Germany
Great Britain
Greece
Hungary
Ireland
Italy
Latvia
Lithuania
Macedonia
Montenegro
Morocco
Moldova
Netherlands
Norway
Poland
Portugal
Romania
Russia
SAR
Serbia
Slovakia
Slovenia
Spain
Sweden
Tunisia
Ukraine
USA

NES
new energy systems

Headquarters:

12 Madara Blvd
9700 Shumen, B U L G A R I A
office@sunsystem.bg
www.sunsystem.bg

SUNSYSTEM®
Energy from the sun

BURNiT by SUNSYSTEM

NES
new energy systems

THE COMPANY

NES - NEW ENERGY SYSTEMS Ltd. is producer of appliances utilizing alternative energy sources.

The company was established in 2002 in Shumen, Bulgaria. Today, the staff amounts to 330 qualified professionals working in facilities of 30 000 sq. m. built up area. All process are governed by QMS ISO 9001:2008.

The production is marketed across Europe, Africa, and South America, and other marketplaces are in the scope of near-future activities.

Most products of NES are designed to utilize alternative energy sources like solar thermal energy, biomass energy and aerothermal energy. These products contribute to sparing the energy reserves of the planet and minimizing the carbon emissions.

SUNSYSTEM®
Energy from the sun

- **SOLAR THERMAL**
  Solar collectors
  Domestic/ Storage / Combi tanks
  Buffer tanks
  Heat pump heaters
- **PHOTOVOLTAIC**
  Photovoltaic modules, accessories
  Engineering, Procurement and Construction of photovoltaic plants

BURNIT by SUNSYSTEM

- **BIOMASS HEATING**
  Solid fuel boilers
  Wood gasifying boilers
  Pellet boilers
  Combi boilers: wood-pellets/chips or solid fuel
  Pellet Burners
  Pellet/Wood Stoves

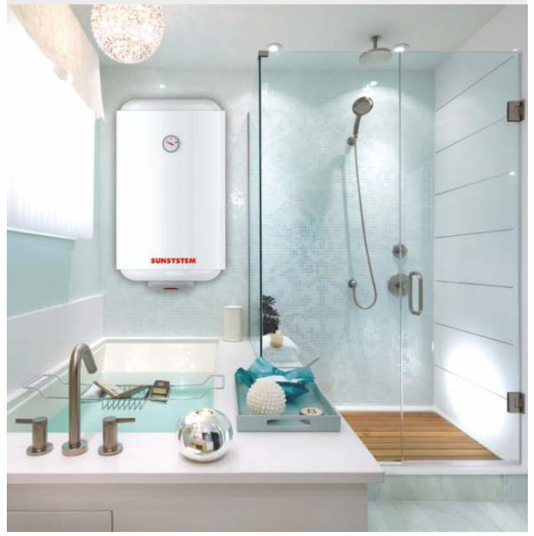

5 YEARS FULL WARRANTY

SUNSYSTEM brand wall-hung DOMESTIC WATER HEATERS are a clever solution for every household supplied with five years full warranty. The range includes both pure electric models, and renewable-ready models designated for multiple energy sources such as solar thermal, biomass boiler, electric backup, etc. Renewable-ready models features water heaters with one coil; with two coils; with coil and water mantle.

CONTENTS

SUNSYSTEM®
technology

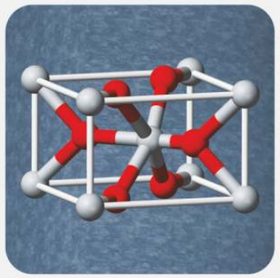

Titanium Enamel

Hot water is aggressive to steel. In order to protect a water tank from corrosion it needs to be isolated from the hot water in it. All SUNSYSTEM water tanks are tightly covered with titanium enamel on the inside. It is then baked to produce a smooth and uniform deposition-free glazing. Thus the domestic hot water remains clean, and the water tank is protected against corrosion.

Insulation

The quality of the insulation of a water heater is a key factor for its heat conservation capability and energy efficiency. All SUNSYSTEM wall-hung water heaters are furnished with rigid PU from the global leader in chemical technologies BASF. Elastopor brand polyurethane boasts extremely low thermal conductivity owing to its closed cell structure. In the same time it is harmless to nature as it contains environment friendly foaming agent. Elastopor PU helps conserve heat for a long time and minimize energy consumption.

Renewable Energy Enabled

Many of the SUNSYSTEM water tanks are renewable energy enabled. They employ both indirect and direct heating and may be used with heat derived from renewable energy sources. Go for renewable energy to cut down on your monthly costs and do your part to help reduce carbon dioxide emissions.

Cathodic Protection

The sacrificial anode protectors built in the SUNSYSTEM water heaters provide secondary protection against corrosion of the water tank in all carbon-steel models. The anode protector acts against corrosion in three different ways simultaneously:

- Decreases the electric potential by means of electro-galvanic polarization.
- Creates a protective film on the metal surface and thus protects it from contact with the water.
- Absorbs the oxygen from water, thus rendering it harmless.

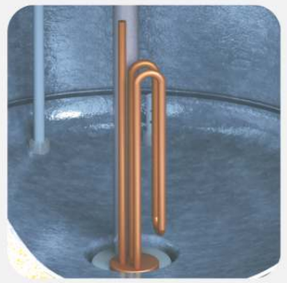

Electric heating kit

All wall-hung water heaters SUNSYSTEM, whether intended for direct heating or indirect, come in set with electric heater of 2 kW or 3 kW. The heater's operation is controlled by thermoregulator with independent thermal protection function. The manually adjustable thermostat may be set within the range 30°C ÷ 80°C. The built in thermal cut-out breaks the circuit should the water temperature reach 95°C.

Heat Exchangers

All S1 and S2 modifications are especially designed to function with external sources of heat from renewable energy. Models MB S1 and BB S1 are equipped with one coil-type heat exchanger and are thus enabeled for indirect water heating using one external heat source. The BB S2 models come with two coils to enable them for indirect heating by means of two external sources - e.g. a solar system and a biomass burning boiler. The BB S1M model is again a unit with two heat exchangers - one coil and one water mantle. This smart solution makes it possible to incorporate two heat exchangers in considerably small volumes - starting from 80 L - not having to sacrifice heat exchanger surface and efficiency. All heat exchangers designed by SUNSYSTEM are characterized by high efficiency and low hydraulic resistance to provide for efficient operation.

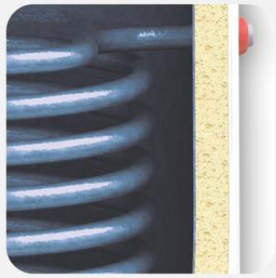

MB series

wall-hung water heaters for the home

Models:

MB EL - electricity powered

MB S1 - with one coil

Easy to install and use. Compact size.

Model MB EL - for direct electric heating.
Model MB S1 - with added heat exchanger for indirect heating. Thanks to the built in heat exchanger coil this water heater may employ both electricity and a renewable energy source (solar collectors or biomass boiler).

Modifications and sizes, L:

MB EL	Diameter ø 440 mm	V	80	100	120
		H	80	100	120
MB S1	Diameter ø 440 mm	V	80	100	120
		H	80	100	120

This ECO PRODUCT ALLOWS YOU TO USE RENEWABLE ENERGY

5 YEARS FULL WARRANTY

SUNSYSTEM®

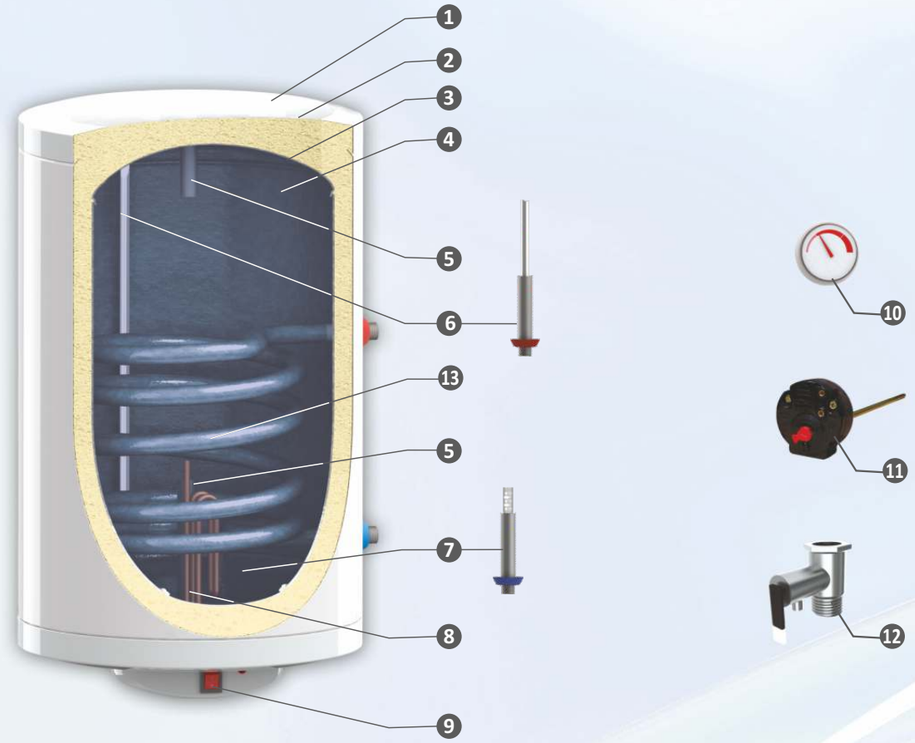

MB S1

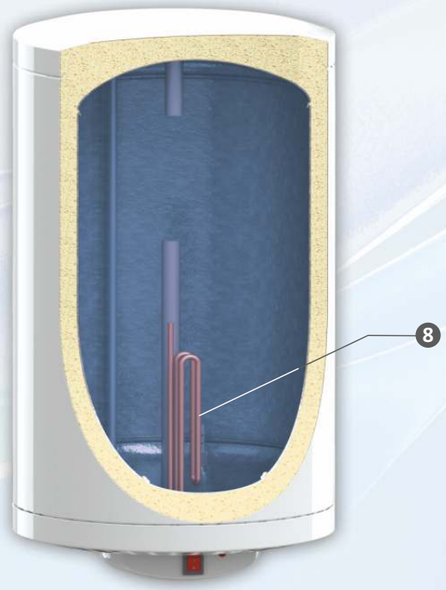

MB EL

1. External casing in white
2. High efficiency thermal insulation of environment-friendly rigid PU
3. Water tank of low-carbon steel
4. Titanium enamel (DIN 4753-3)
5. Cathodic protection of the tank by means of sacrificial anode protector (DIN 4753-6)
6. Stainless tube for hot water
7. Stratifier mounted on cold water inlet
8. Electric heating element
9. Power ON / OFF button
10. Temperature indicator
11. Dual thermal electric protection
12. Safety valve, 8 bar
13. Heat exchanger coil

MB series

technical specifications
vertical modifications

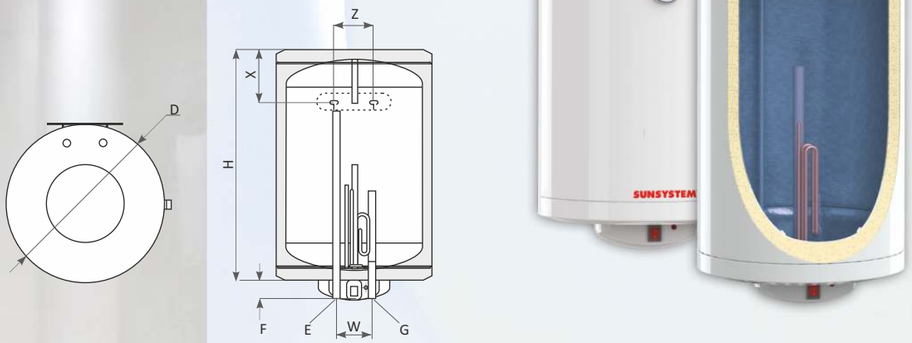

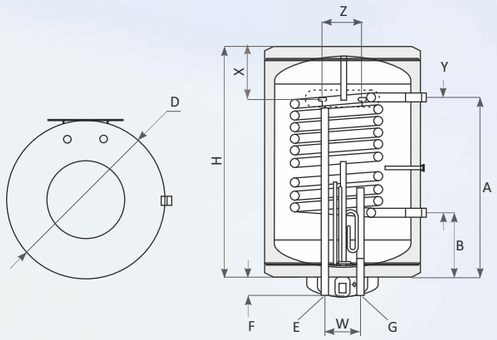

			MB 80 V EL	MB 100 V EL	MB 120 V EL	MB 80 V S1	MB 100 V S1	MB 120 V S1
	Volume	L	80	100	120	80	100	120
	Height / Depth	mm	800/460	960/460	1120/460	800/460	960/460	1120/460
	Diameter D	mm	ø 440	ø 440	ø 440	ø 440	ø 440	ø 440
	Operating pressure/max.temperature	bar/°C	8/95	8/95	8/95	8/95	8/95	8/95
	Tasting pressure of tank	bar	13	13	13	13	13	13
Coil	Heat exchanger surface	m^2				0.4	0.53	0.53
Coil	Heat exchanger volume	L				2.04	2.70	2.70
Coil	Prolonged power according to DIN 4708; 80/60/45 °C	kW m^3/h				8.2 0.20	9 0.22	9 0.22
Coil	NL – power coefficient at 60°C					1	1.3	1.3
Coil	Pressure drop Δp	mbar				50	55	55
Coil	Operating pressure/max.operating temperature of coil	bar/°C				16/110	16/110	16/110
Coil	Testing pressure of coil	bar				25	25	25
Coil	Temperature indicator		✓	✓	✓	✓	✓	✓
Coil	Anode	psc	2	2	2	2	2	2
Coil	Heating element (optional wattage)	kW	2/3	2/3	2/3	2/3	2/3	2/3
Coil	Weight	kg	45	51	60	53	58	66
Coil	Coil outlet	A, mm				R¾"/426	R¾"/540	R¾"/540
Coil	Cold water inlet	G, mm	R½"	R½"	R½"	R½"	R½"	R½"
Coil	Coil inlet	B, mm				R¾"/140	R¾"/140	R¾"/140
Coil	Hot water outlet	E, mm	R½"	R½"	R½"	R½"	R½"	R½"
Coil	Dimension F	mm	60	60	60	60	60	60
Coil	Dimension H	mm	740	900	1060	740	900	1060
Coil	Dimension W	mm	120	120	120	120	120	120
Coil	Dimension X	mm	180	180	180	180	180	180
Coil	Dimension Y	mm				286	400	400
Coil	Dimension Z	mm	240	240	240	240	240	240

MB series

technical specifications
horizontal modifications

SUNSYSTEM®

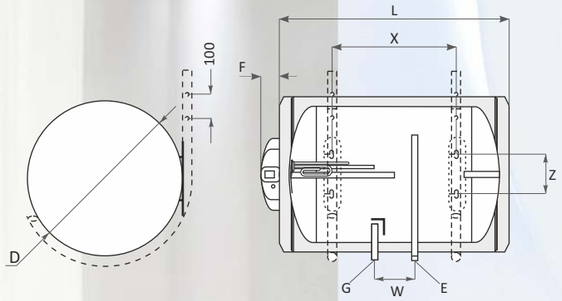

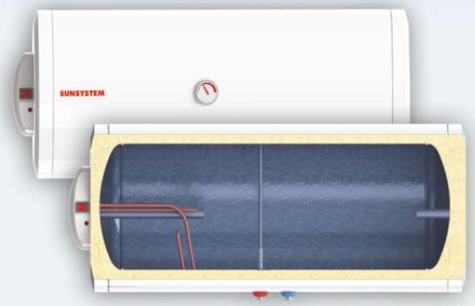

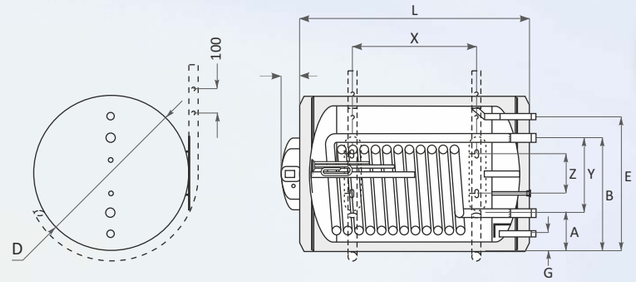

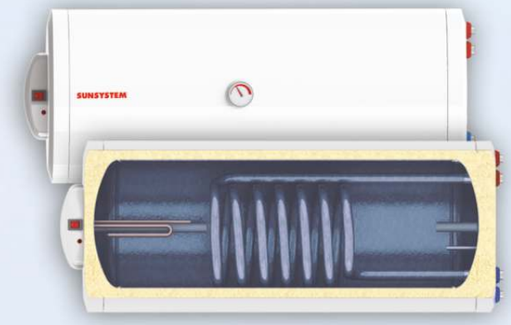

		MB 80 H EL	MB 100 H EL	MB 120 H EL	MB 80 H S1	MB 100 H S1	MB 120 H S1
Volume	L	80	100	120	80	100	120
Height / Depth	mm	800/460	960/460	1120/460	800/460	960/460	1120/460
Diameter D	mm	ø 440	ø 440	ø 440	ø 440	ø 440	ø 440
Operating pressure/max.temperature	bar/°C	8/95	8/95	8/95	8/95	8/95	8/95
Tasting pressure of tank	bar	13	13	13	13	13	13
Coil: Heat exchanger surface	m^2				0.4	0.53	0.53
Coil: Heat exchanger volume	L				2.04	2.70	2.70
Coil: Prolonged power according to DIN 4708; 80/60/45 °C	kW m^3/h				8.2 0.20	9 0.22	9 0.22
Coil: NL – power coefficient at 60°C					1	1.3	1.3
Coil: Pressure drop Δp	mbar				50	55	55
Coil: Operating pressure/max.operating temperature of coil	bar/°C				16/110	16/110	16/110
Coil: Testing pressure of coil	bar				25	25	25
Temperature indicator		✓	✓	✓	✓	✓	✓
Anode	pcs.	2	2	2	2	2	2
Heating element (optional wattage)	kW	2/3	2/3	2/3	2/3	2/3	2/3
Weight	kg	45	51	60	53	58	66
Coil outlet	A, mm				R¾"/120	R¾"/120	R¾"/120
Cold water inlet	G, mm	R½"	R½"	R½"	R½"/45	R½"/45	R½"/45
Coil inlet	B, mm				R¾"/350	R¾"/350	R¾"/350
Hot water outlet	E, mm	R½"	R½"	R½"	R½"/395	R½"/395	R½"/395
Dimension F	mm	60	60	60	60	60	60
Dimension L	mm	740	900	1060	740	900	1060
Dimension W	mm	80	80	80			
Dimension X	mm	380	540	700	380	540	700
Dimension Y	mm				230	230	230
Dimension Z	mm	240	240	240	240	240	240

BB series

wall-hung water heaters for the home

Models:

- **BB EL - electricity powered**
- **BB S1 - with one coil**
- **BB S2 - with two coils**
- **B S1 M - with coil and mantle**

High efficiency water heater. Easy to use and reliable.
Model BB EL - for direct electric heating.
Models with added heat exchangers BB S1, BB S2 and BB S1M enables the water heater to utilize an external sources of renewable energy, such as a solar system or/and a biomass boiler.

Modifications and sizes, L:

BB EL	Diameter ø 520 mm	V	80	100	120	150	200
		H	80	100	120	150	200
BB S1	Diameter ø 520 mm	V	80	100	120	150	200
		H	80	100	120	150	200
BB S2	Diameter ø 520 mm	V					200
		H					
BB S1 M	Diameter ø 520 mm	V	80	100	120	150	200
		H	80	100	120	150	200

This ECO PRODUCT ALLOWS YOU TO USE RENEWABLE ENERGY

5 YEARS FULL WARRANTY

SUNSYSTEM®

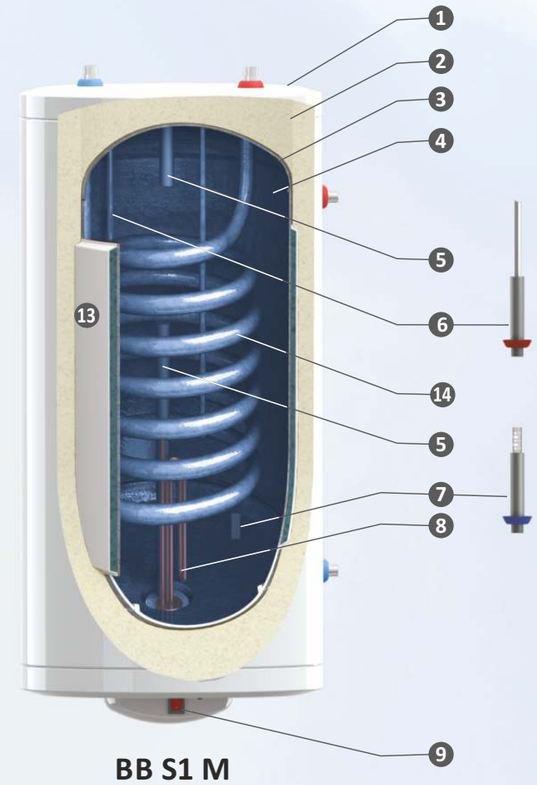

BB S1 M

1. External casing in white
2. High efficiency thermal insulation of environment-friendly rigid PU, with thicknes 32mm
3. Water tank of low-carbon steel with wall thickness 2,5 mm
4. Titanium enamel (DIN 4753-3)
5. Cathodic protection of the tank by means of sacrificial anode protector (DIN 4753-6)
6. Stainless tube for hot water
7. Stratifier mounted on cold water inlet
8. Electric heating element
9. Power ON / OFF button
10. Temperature indicator
11. Dual thermal electric protection
12. Safety valve, 8 bar
13. Water mantle heat exchanger
14. Lower heat exchanger coil
15. Upper heat exchanger coil

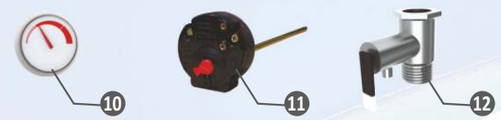

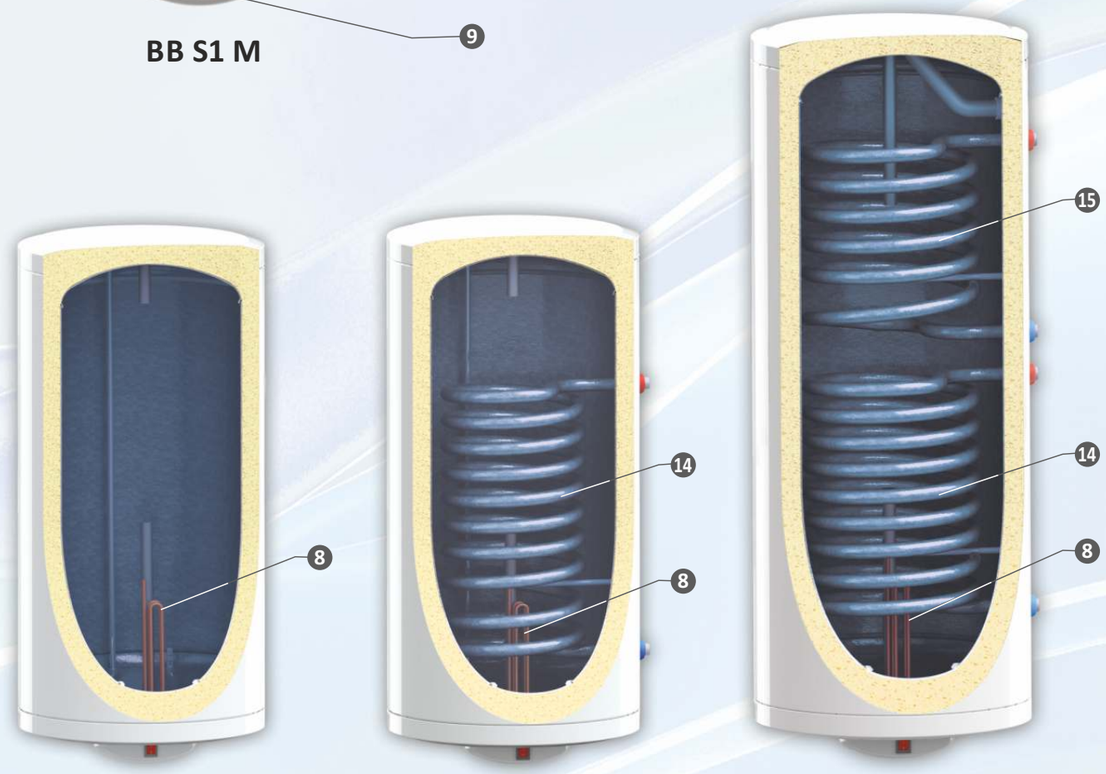

BB EL **BB S1** **BB S2**

BB series

technical specifications
vertical modifications

SUNSYSTEM®

		BB 80 V EL	BB 100 V EL	BB 120 V EL	BB 150 V EL	BB 200 V EL	BB 80 V S1	BB 100 V S1	BB 120 V S1	BB 150 V S1	BB 200 V S1	BB 200 V S2	BB 80 V S1 M	BB 100 V S1 M	BB 120 V S1 M	BB 150 V S1 M	BB 200 V S1 M
Volume	L	80	100	120	150	200	80	100	120	150	200	200	80	100	120	150	200
Height / Depth	mm	700/540	830/540	960/540	1100/540	1370/540	700/540	830/540	960/540	1100/540	1370/540	1370/540	700/540	830/540	960/540	1100/540	1370/540
Diameter D	mm	ø 520	ø 520	ø 520	ø 520	ø 520	ø 520	ø 520	ø 520	ø 520	ø 520	ø 520	ø 520	ø 520	ø 520	ø 520	ø 520
Operating pressure/max.temperature	bar/°C	8/95	8/95	8/95	8/95	8/95	8/95	8/95	8/95	8/95	8/95	8/95	8/95	8/95	8/95	8/95	8/95
Tasting pressure of tank	bar	13	13	13	13	13	13	13	13	13	13	13	13	13	13	13	13
Lower coil S1																	
Heat exchanger surface	m^2						0.4	0.53	0.53	0.8	0.8	0.8	0.4	0.53	0.53	0.8	0.8
Heat exchanger volume	L						2.04	2.70	2.70	4.07	4.07	4.07	2.04	2.70	2.70	4.07	4.07
Prolonged power according to DIN 4708; 80/60/45 °C	kW m^3/h						8.2 0.20	9 0.22	9 0.22	15 0.37	15 0.37	15 0.37	8.2 0.20	9 0.22	9 0.22	15 0.37	15 0.37
NL – power coefficient at 60°C							1	1.3	1.3	1.5	1.5	1.5	1	1.3	1.3	1.5	1.5
Pressure drop Δp	mbar						50	55	55	60	60	60	50	55	55	60	60
Upper coil S2																	
Heat exchanger surface	m^2											0.53					
Heat exchanger volume	L											2.70					
Prolonged power according to DIN 4708; 80/60/45 °C	kW m^3/h											9 0.22					
NL – power coefficient at 60°C												1.3					
Pressure drop Δp	mbar											55					
Operating pressure/max.operating temperature of coils	bar/°C						16/110	16/110	16/110	16/110	16/110	16/110	16/110	16/110	16/110	16/110	16/110
Testing pressure of coils	bar						25	25	25	25	25	25	25	25	25	25	25
Water mantle																	
Mantle-Heat exchanger surface	m^2												0.46	0.63	0.78	0.94	1.25
Mantle- Heat exchanger volume	L												3.35	4.64	6.72	6.91	9.18
Pressure drop Δp	mbar												20	20	20	20	20
Operating pressure /temperatute	bar/°C												1.5/95	1.5/95	1.5/95	1.5/95	1.5/95
Testing pressure of mantle	bar												3	3	3	3	3
Temperature indicator		✓	✓	✓	✓	✓	✓	✓	✓	✓	✓	✓	✓	✓	✓	✓	✓
Anode	pcs.	2	2	2	2	2	2	2	2	2	2	2	2	2	2	2	2
Heating element (optional wattage)	kW	2/3	2/3	2/3	2/3	2/3	2/3	2/3	2/3	2/3	2/3	2/3	2/3	2/3	2/3	2/3	2/3
Weight	kg	45	51	60	70	74	53	60	70	80	88	96	62	76	88	98	110

BB series

technical specifications
vertical modifications

SUNSYSTEM®

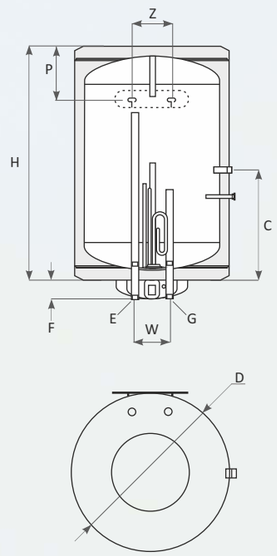

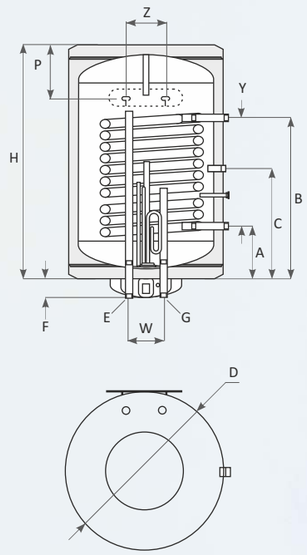

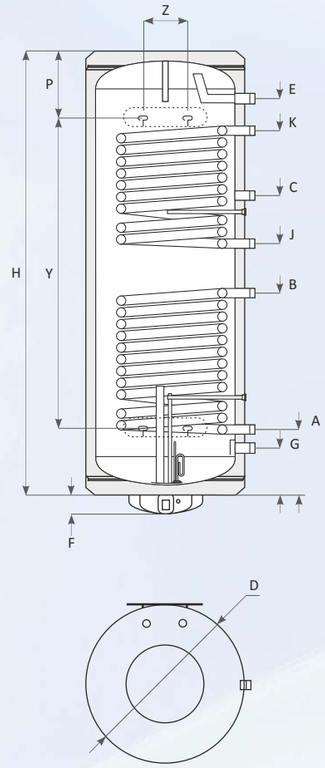

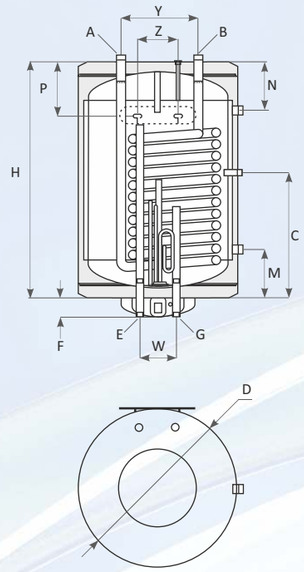

		BB 80 V EL	BB 100 V EL	BB 120 V EL	BB 150 V EL	BB 200 V EL	BB 80 V S1	BB 100 V S1	BB 120 V S1	BB 150 V S1	BB 200 V S1	BB 200 V S2	BB 80 V S1 M	BB 100 V S1 M	BB 120 V S1 M	BB 150 V S1 M	BB 200 V S1 M
Lower coil outlet	A, mm						R¾"/165	R¾"/165	R¾"/165	R¾"/165	R¾"/215	R¾"/215	R¾"	R¾"	R¾"	R¾"	R¾"
Cold water inlet	G, mm	R½"	R½"	R½"	R½"	R¾"/150	R½"	R½"	R½"	R½"	R¾"/150	R¾"/150	R½"	R½"	R½"	R½"	R¾"/150
Lower coil intlet	B, mm						R¾"/451	R¾"/565	R¾"/565	R¾"/717	R¾"/653	R¾"/653	R¾"	R¾"	R¾"	R¾"	R¾"
Upper coil outlet	J, mm											R¾"/733					
Water mantle outlet	M, mm												R½"/195	R½"/200	R½"/215	R½"/230	R½"/260
Recirculation	C, mm					R¾"/883					R¾"/553	R¾"/883					R¾"/553
Water mantle inlet	N, mm												R½"/195	R½"/200	R½"/215	R½"/230	R½"/260
Upper coil inlet	K, mm											R¾"/1095					
Hot water outlet	E, mm	R½"	R½"	R½"	R½"	R¾"/1155	R½"	R½"	R½"	R½"	R¾"/1155	R¾"/1155	R½"	R½"	R½"	R½"	R¾"/1155
Dimension F	mm	60	60	60	60	60	60	60	60	60	60	60	60	60	60	60	60
Dimension H	mm	640	770	900	1040	1310	640	770	900	1040	1310	1310	640	770	900	1040	1310
Dimension P	mm	200	200	200	200	220	200	200	200	200	220	220	200	200	200	200	220
Dimension W	mm	120	120	120	120		120	120	120	120			120	120	120	120	
Dimension Y	mm						286	400	400	552	438	900	250	250	250	250	250
Dimension Z	mm	240	240	240	240	240	240	240	240	240	240	240	240	240	240	240	240

BB series

technical specifications
horizontal modifications

SUNSYSTEM®

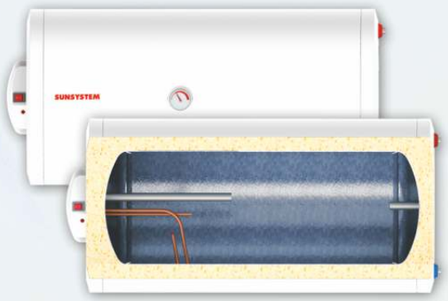

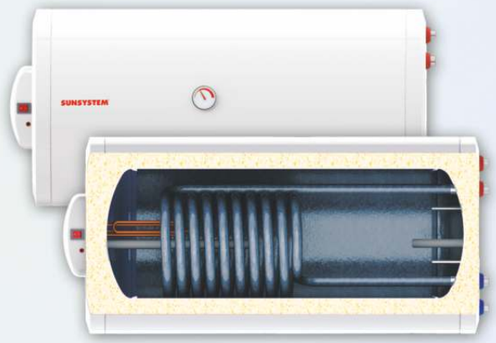

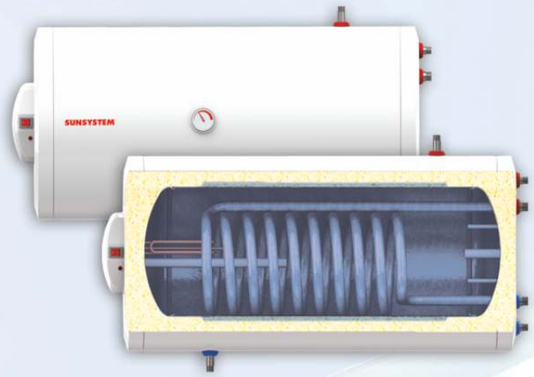

			BB 80 H EL	BB 100 H EL	BB 120 H EL	BB 150 H EL	BB 200 H EL	BB80 H S1	BB 100 H S1	BB 120 H S1	BB 150 H S1	BB 200 H S1	BB 80 H S1 M	BB 100 H S1 M	BB 120 H S1 M	BB 150 H S1 M	BB 200 H S1 M
	Volume	L	80	100	120	150	200	80	100	120	150	200	80	100	120	150	200
	Height / Depth	mm	700/540	830/540	960/540	1100/540	1370/540	700/540	830/540	960/540	1100/540	1370/540	700/540	830/540	960/540	1100/540	1370/540
	Diameter D	mm	ø 520	ø 520	ø 520	ø 520	ø 520	ø 520	ø 520	ø 520	ø 520	ø 520	ø 520	ø 520	ø 520	ø 520	ø 520
	Operating pressure/max.temperature	bar/°C	8/95	8/95	8/95	8/95	8/95	8/95	8/95	8/95	8/95	8/95	8/95	8/95	8/95	8/95	8/95
	Tasting pressure of tank	bar	13	13	13	13	13	13	13	13	13	13	13	13	13	13	13
Coil	Heat exchanger surface	m^2						0.4	0.53	0.53	0.8	0.8	0.4	0.53	0.53	0.8	0.8
Coil	Heat exchanger volume	L						2.04	2.70	2.70	4.07	4.07	2.04	2.70	2.70	4.07	4.07
Coil	Prolonged power according to DIN 4708; 80/60/45 °C	kW m^3/h						8.2 0.20	9 0.22	9 0.22	15 0.37	15 0.37	8.2 0.20	9 0.22	9 0.22	15 0.37	15 0.37
Coil	NL – power coefficient at 60°C							1	1.3	1.3	1.5	1.5	1	1.3	1.3	1.5	1.5
Coil	Pressure drop Δp	mbar						50	55	55	60	60	50	55	55	60	60
Coil	Operating pressure/max.operating temperature of coil	bar/°C						16/110	16/110	16/110	16/110	16/110	16/110	16/110	16/110	16/110	16/110
Coil	Testing pressure of coils	bar						25	25	25	25	25	25	25	25	25	25
Water mantle	Mantle-Heat exchanger surface	m^2											0.46	0.63	0.78	0.94	1.25
Water mantle	Mantle- Heat exchanger volume	L											3.35	4.64	6.72	6.91	9.18
Water mantle	Pressure drop Δp	mbar											20	20	20	20	20
Water mantle	Operating pressure /temperatute	bar/°C											1.5/95	1.5/95	1.5/95	1.5/95	1.5/95
Water mantle	Testing pressure of mantle	bar											3	3	3	3	3
	Temperature indicator		✓	✓	✓	✓	✓	✓	✓	✓	✓	✓	✓	✓	✓	✓	✓
	Anode	pcs.	2	2	2	2	2	2	2	2	2	2	2	2	2	2	2
	Heating element (optional wattage)	kW	2/3	2/3	2/3	2/3	2/3	2/3	2/3	2/3	2/3	2/3	2/3	2/3	2/3	2/3	2/3
	Weight	kg	45	51	60	70	74	53	60	70	80	88	62	76	88	98	110

BB series

technical specifications
horizontal modifications

SUNSYSTEM®

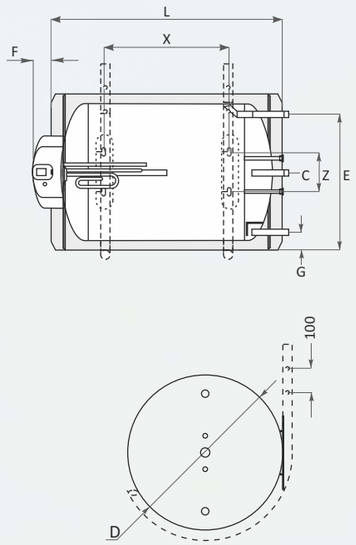

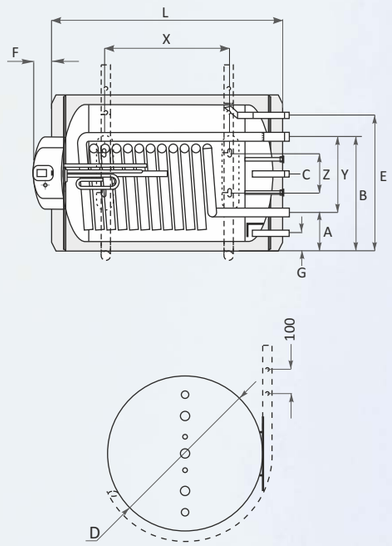

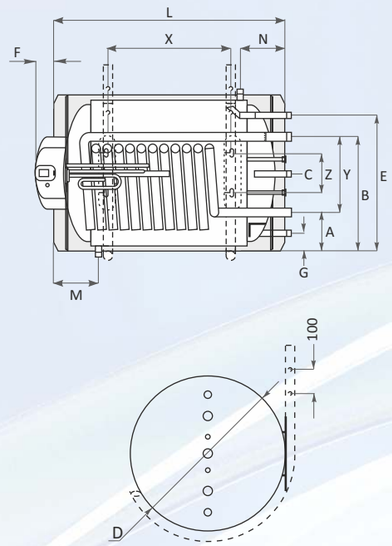

		BB 80 H EL	BB 100 H EL	BB 120 H EL	BB 150 H EL	BB 200 H EL	BB 80 H S1	BB 100 H S1	BB 120 H S1	BB 150 H S1	BB 200 H S1	BB 80 H S1 M	BB 100 H S1 M	BB 120 H S1 M	BB 150 H S1 M	BB 200 H S1 M
Coil outlet	A, mm						R¾"/135	R¾"/135	R¾"/135	R¾"/135	R¾"/135	R¾"/135	R¾"/135	R¾"/135	R¾"/135	R¾"/135
Cold water inlet	G, mm	R½"/65	R½"/65	R½"/65	R½"/65	R¾"/65	R½"/65	R½"/65	R½"/65	R½"/65	R¾"/65	R½"/65	R½"/65	R½"/65	R½"/65	R¾"/65
Coil inlet	B, mm						R¾"/385	R¾"/385	R¾"/385	R¾"/385	R¾"/385	R¾"/385	R¾"/385	R¾"/385	R¾"/385	R¾"/385
Water mantle outlet	M, mm											R½"/195	R½"/200	R½"/215	R½"/230	R½"/260
Recirculation	C, mm					R¾"/260					R¾"/260					R¾"/260
Water mantle inlet	N, mm											R½"/195	R½"/200	R½"/215	R½"/230	R½"/260
Hot water outlet	E, mm	R½"/455	R½"/455	R½"/455	R½"/455	R¾"/455	R½"/455	R½"/455	R½"/455	R½"/455	R¾"/455	R¾"/455	R¾"/455	R¾"/455	R¾"/455	R¾"/455
Dimension F	mm	60	60	60	60	60	60	60	60	60	60	60	60	60	60	60
Dimension L	mm	640	770	900	1040	1310	640	770	900	1040	1310	640	770	900	1040	1310
Dimension X	mm	230	360	490	630	900	230	360	490	630	900	170	290	390	500	710
Dimension Y	mm						250	250	250	250	250	250	250	250	250	250
Dimension Z	mm	240	240	240	240	240	240	240	240	240	240	240	240	240	240	240

MB-New Line series

wall-hung water heaters for the home

NEW LINE

Models:

MB EL NH/DH - electricity powered

MB EL SLIM NH - electricity powered

Easy to install and use. Compact size.
For direct electric heating.
Available models with standard type of electiric heating element (NH) or models with dry type of electiric heating element (DH).
The smaller diameter of model MB EL SLIM NH is compensated by its elongated shape. Suitable for narrow spaces.

Modifications and sizes, L:

MB EL NH MB EL DH	Diameter ø 445 mm	standard heating element	V	50	80
		dry heating element	V		80
MB EL SLIM NH	Diameter ø 355 mm	standard heating element	V	50	80

5 YEARS FULL WARRANTY

SUNSYSTEM®

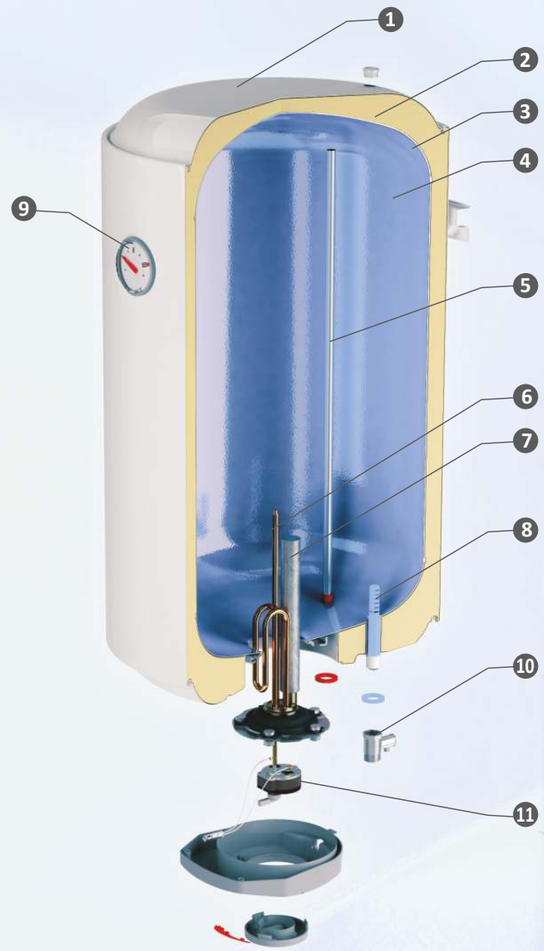

MB EL NH/DH

1. External casing in white
2. High efficiency thermal insulation of environment-friendly rigid PU, with thicknes 20 mm
3. Water tank of low-carbon steel
4. Titanium enamel (DIN 4753-3)
5. Stainless tube for hot water
6. Electric heating element - NH (standard) or DH (dry)
7. Cathodic protection of the tank by means of sacrificial anode protector (DIN 4753-6)
8. Stratifier mounted on cold water inlet
9. Temperature indicator
10. Safety valve, 7.5 bar
11. Dual thermal electric protection

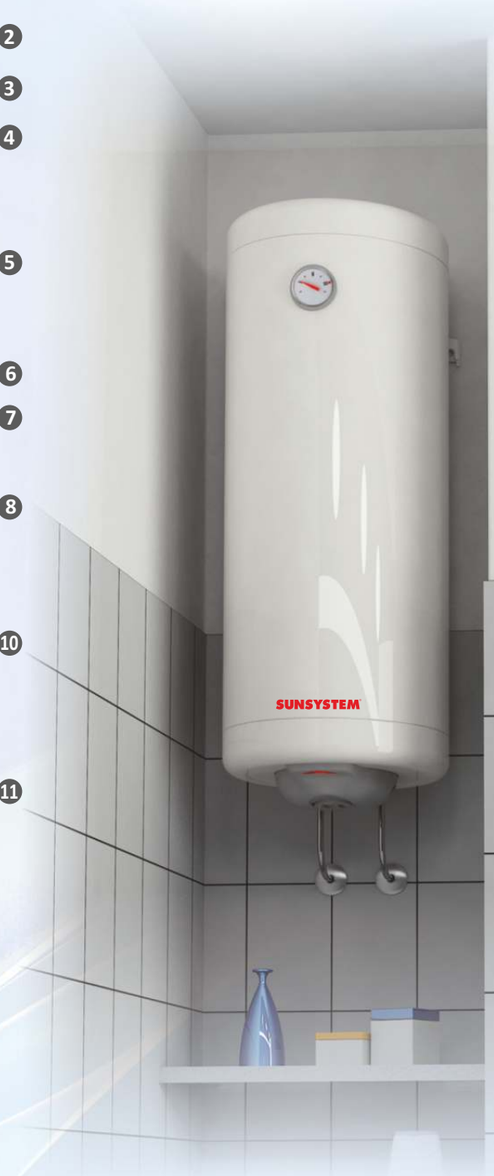

MB EL SLIM NH

MB-New Line series

technical specifications
vertical modifications

SUNSYSTEM®

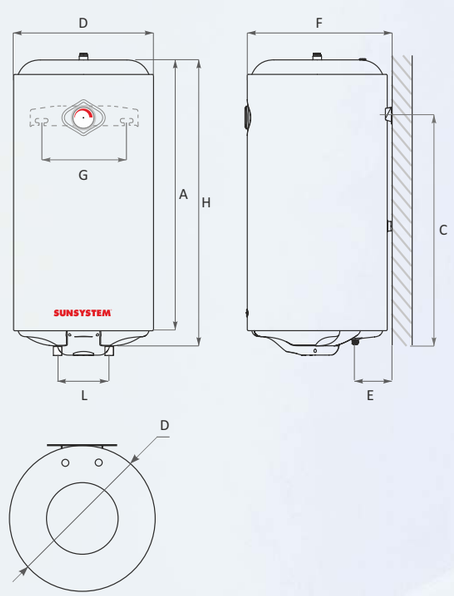

		MB 50 V EL SLIM NH	MB 80 V EL SLIM NH	MB 50 V EL NH	MB 80 V EL NH	MB 80 V EL DH
Volume	L	50	60	50	80	80
Height H / Depth F	mm	815 / 375	1205/375	620/465	865/465	865/465
Diameter D	mm	ø 355	ø 355	ø 445	ø 445	ø 445
Operating pressure/max.temperature	bar/°C	7.5/95	7.5/95	7,5/95	7,5/95	7,5/95
Temperature indicator		✓	✓	✓	✓	✓
Anode		✓	✓	✓	✓	✓
heating time of water /Δt = 45°C/	час	2,45	3,30	2,45	3,30	3,30
Electric heating element	kW	2	2	2	2	2
Weight	kg	17	24	16,5	22,2	22,2
Dimension A	mm	765	1155	550	795	795
Dimension C	mm	630	1020	375	618	618
Dimension E	mm	90	90	115	118	118
Dimension G	mm	300	300	300	300	300
Dimension L	mm	100	100	100	100	100

серия LB AS/US

wall-hung water heaters above /under sink

NEW LINE

Models:

LB EL AS - electricity powered, above sink installation

LB EL US - electricity powered, under sink installation

Easy to use. Comfortable due its compact size and the instant water heating.
Suitable for kitchen or bathroom installation

Modifications and sizes, L:

LB EL AS	Diameter ø 265 mm	V	10
	Diameter ø 295 mm	V	15
LB EL US	Diameter ø 265 mm	V	10
	Diameter ø 295 mm	V	15

5 YEARS FULL WARRANTY

SUNSYSTEM®

LB EL AS

LB EL US

External casing in white
High efficiency thermal insulation of environment-friendly rigid PU, with thicknes 25 mm
Water tank of low-carbon steel
Titanium enamel (DIN 4753-3)
Electric heating element
Cathodic protection of the tank by means of sacrificial anode protector (DIN 4753-6)
Safety valve, 7.5 bar
Dual thermal electric protection

LB AS/US series

wall-hung water heaters above /under sink technical specifications

SUNSYSTEM®

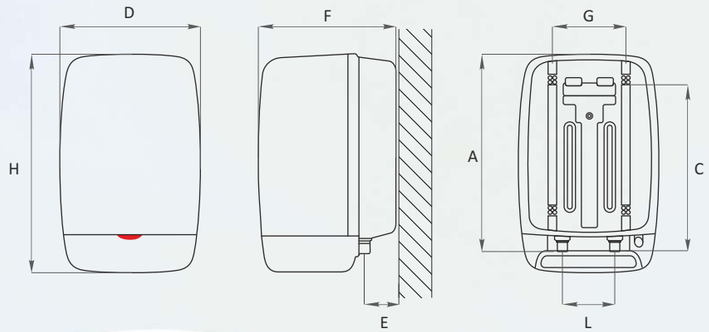

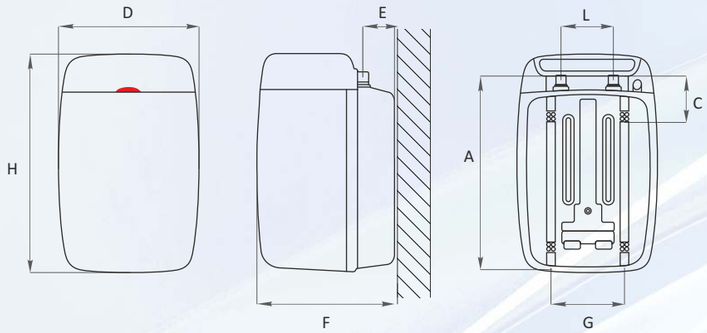

		LB 10 EL AS	LB 15 EL AS	LB 10 EL US	LB 15 EL US
Volume	L	10	15	10	15
Height H / Depth F	mm	415/264	445/296	415/264	445/296
Diameter D	mm	ø 265	ø 295	ø 265	ø 295
Operating pressure/max.temperature	bar/°C	7.5/95	7.5/95	7.5/95	7.5/95
Anode		✓	✓	✓	✓
Heating time of water /Δt = 45°C/	час	0.25	0.35	0.25	0.35
Electric heating element	kW	1.2	1.2	1.2	1.2
Weight	kg	6.5	7.5	6.5	7.5
Dimension A	mm	380	420	380	420
Dimension C	mm	332	332	102	102
Dimension E	mm	73	93	73	93
Dimension G	mm	140	140	140	140
Dimension L	mm	100	100	100	100